June 2005

SemiHow
Know-How for Semiconductor

HFP730
400V N-Channel MOSFET

BV_{DSS} = 400 V
$R_{DS(on)\ typ}$ = 0.8 Ω
I_D = 5.5 A

TO-220

1.Gate 2. Drain 3. Source

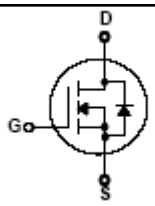

FEATURES

- Originative New Design
- Superior Avalanche Rugged Technology
- Robust Gate Oxide Technology
- Very Low Intrinsic Capacitances
- Excellent Switching Characteristics
- Unrivalled Gate Charge : 18 nC (Typ.)
- Extended Safe Operating Area
- Lower $R_{DS(ON)}$: 0.8 Ω (Typ.) @V_{GS}=10V
- 100% Avalanche Tested

Absolute Maximum Ratings

T_C=25℃ unless otherwise specified

Symbol	Parameter	Value	Units
V_{DSS}	Drain-Source Voltage	400	V
I_D	Drain Current – Continuous (T_C = 25℃)	5.5	A
	Drain Current – Continuous (T_C = 100℃)	3.5	A
I_{DM}	Drain Current – Pulsed (Note 1)	22	A
V_{GS}	Gate-Source Voltage	±30	V
E_{AS}	Single Pulsed Avalanche Energy (Note 2)	330	mJ
I_{AR}	Avalanche Current (Note 1)	5.5	A
E_{AR}	Repetitive Avalanche Energy (Note 1)	7.3	mJ
dv/dt	Peak Diode Recovery dv/dt (Note 3)	5.5	V/ns
P_D	Power Dissipation (T_C = 25℃)	73	W
	– Derate above 25℃	0.58	W/℃
T_J, T_{STG}	Operating and Storage Temperature Range	-55 to +150	℃
T_L	Maximum lead temperature for soldering purposes, 1/8" from case for 5 seconds	300	℃

Thermal Resistance Characteristics

Symbol	Parameter	Typ.	Max.	Units
$R_{\theta JC}$	Junction-to-Case	--	1.71	℃/W
$R_{\theta CS}$	Case-to-Sink	0.5	--	
$R_{\theta JA}$	Junction-to-Ambient	--	62.5	

© SEMIHOW REV.A0,June 2005

Electrical Characteristics T_C=25 °C unless otherwise specified

Symbol	Parameter	Test Conditions	Min	Typ	Max	Units
On Characteristics						
V_{GS}	Gate Threshold Voltage	$V_{DS} = V_{GS}$, I_D = 250 μA	2.5	--	4.5	V
$R_{DS(ON)}$	Static Drain-Source On-Resistance	V_{GS} = 10 V, I_D = 2.75 A	--	0.8	1.0	Ω
Off Characteristics						
BV_{DSS}	Drain-Source Breakdown Voltage	V_{GS} = 0 V, I_D = 250 μA	400	--	--	V
$\Delta BV_{DSS}/\Delta T_J$	Breakdown Voltage Temperature Coefficient	I_D = 250 μA, Referenced to25℃	--	0.4	--	V/℃
I_{DSS}	Zero Gate Voltage Drain Current	V_{DS} = 400 V, V_{GS} = 0 V	--	--	1	μA
		V_{DS} = 320 V, T_C = 125℃	--	--	10	μA
I_{GSSF}	Gate-Body Leakage Current, Forward	V_{GS} = 30 V, V_{DS} = 0 V	--	--	100	nA
I_{GSSR}	Gate-Body Leakage Current, Reverse	V_{GS} = -30 V, V_{DS} = 0 V	--	--	-100	nA
Dynamic Characteristics						
C_{iss}	Input Capacitance	V_{DS} = 25 V, V_{GS} = 0 V, f = 1.0 MHz	--	680	885	pF
C_{oss}	Output Capacitance		--	95	123	pF
C_{rss}	Reverse Transfer Capacitance		--	16	21	pF
Switching Characteristics						
$t_{d(on)}$	Turn-On Time	V_{DS} = 200 V, I_D = 5.5 A, R_G = 25 Ω (Note 4,5)	--	12	15	ns
t_r	Turn-On Rise Time		--	40	90	ns
$t_{d(off)}$	Turn-Off Delay Time		--	60	130	ns
t_f	Turn-Off Fall Time		--	40	90	ns
Q_g	Total Gate Charge	V_{DS} = 320 V, I_D = 5.5 A, V_{GS} = 10 V (Note 4,5)	--	18	23	nC
Q_{gs}	Gate-Source Charge		--	3.9	--	nC
Q_{gd}	Gate-Drain Charge		--	8.4	--	nC
Source-Drain Diode Maximum Ratings and Characteristics						
I_S	Continuous Source-Drain Diode Forward Current		--	--	5.5	A
I_{SM}	Pulsed Source-Drain Diode Forward Current		--	--	22	
V_{SD}	Source-Drain Diode Forward Voltage	I_S = 5.5 A, V_{GS} = 0 V	--	--	1.5	V
trr	Reverse Recovery Time	I_S = 5.5 A, V_{GS} = 0 V, di_F/dt = 100 A/μs (Note 4)	--	265	--	ns
Qrr	Reverse Recovery Charge		--	2.3	--	μC

Notes ;

1. Repetitive Rating : Pulse width limited by maximum junction temperature
2. L=19mH, I_{AS}=5.5A, V_{DD}=50V, R_G=25Ω, Starting T_J=25°C
3. I_{SD}≤5.5A, di/dt≤300A/μs, V_{DD}≤BV_{DSS} , Starting T_J=25 °C
4. Pulse Test : Pulse Width ≤ 300μs, Duty Cycle ≤ 2%
5. Essentially Independent of Operating Temperature

© SEMIHOW REV.A0,June 2005

Typical Characteristics

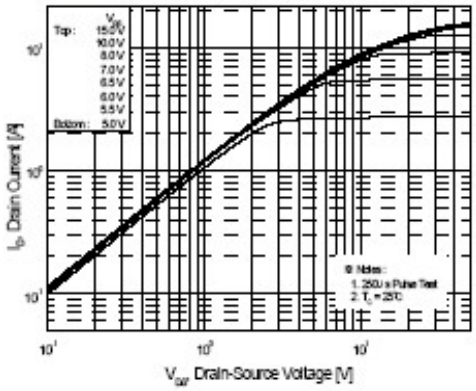

Figure 1. On Region Characteristics

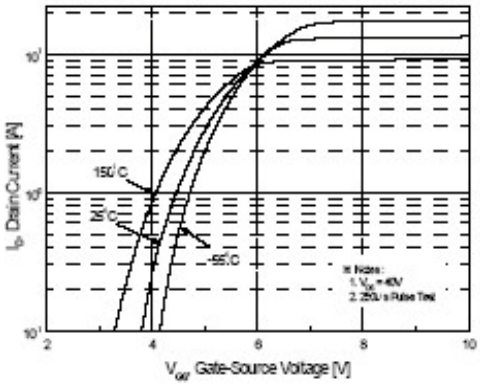

Figure 2. Transfer Characteristics

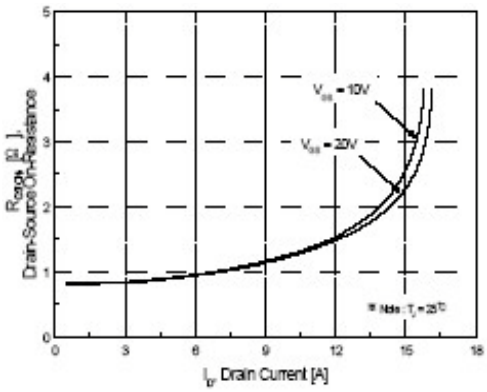

Figure 3. On Resistance Variation vs Drain Current and Gate Voltage

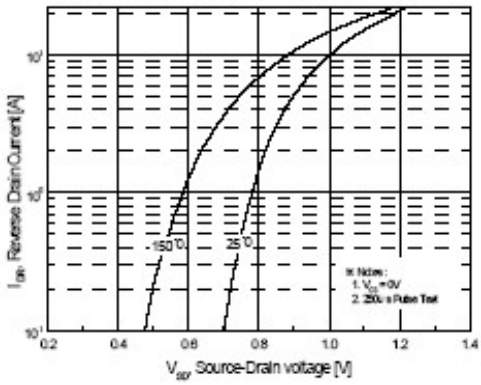

Figure 4. Body Diode Forward Voltage Variation with Source Current and Temperature

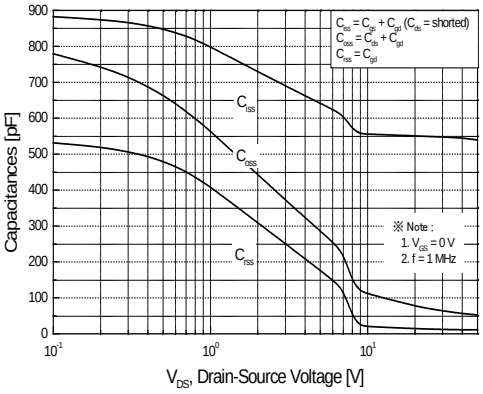

Figure 5. Capacitance Characteristics

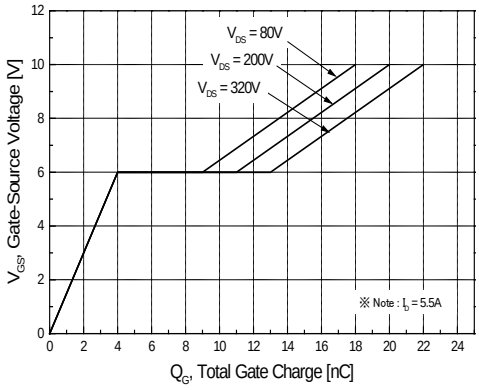

Figure 6. Gate Charge Characteristics

© SEMIHOW REV.A0,June 2005

Typical Characteristics (continued)

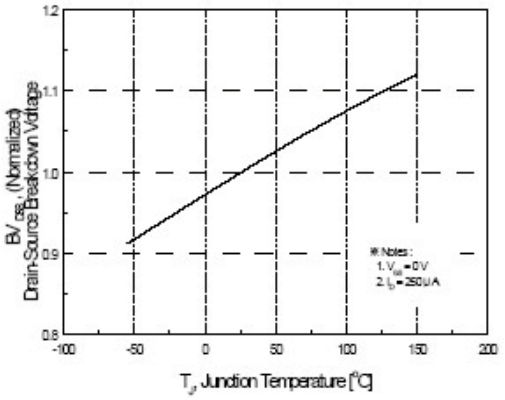

Figure 7. Breakdown Voltage Variation vs Temperature

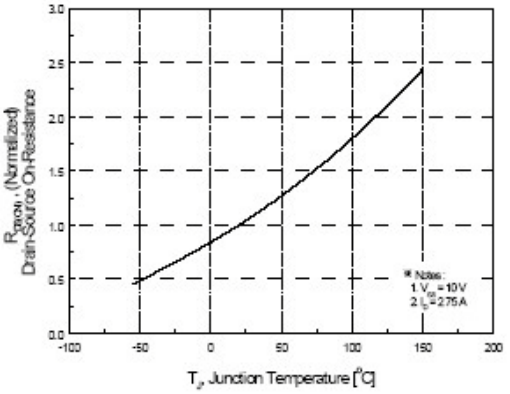

Figure 8. On-Resistance Variation vs Temperature

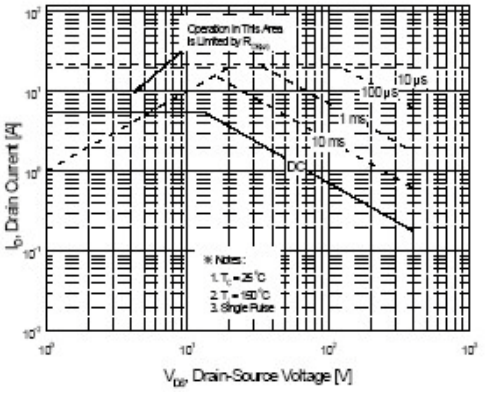

Figure 9. Maximum Safe Operating Area

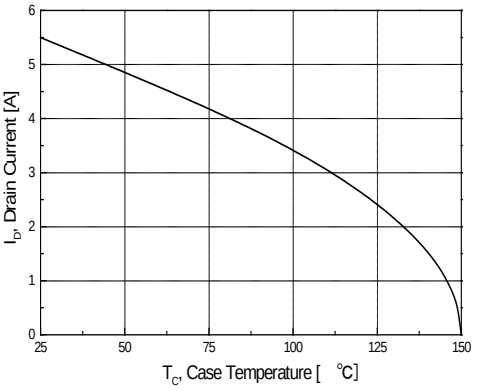

Figure 10. Maximum Drain Current vs Case Temperature

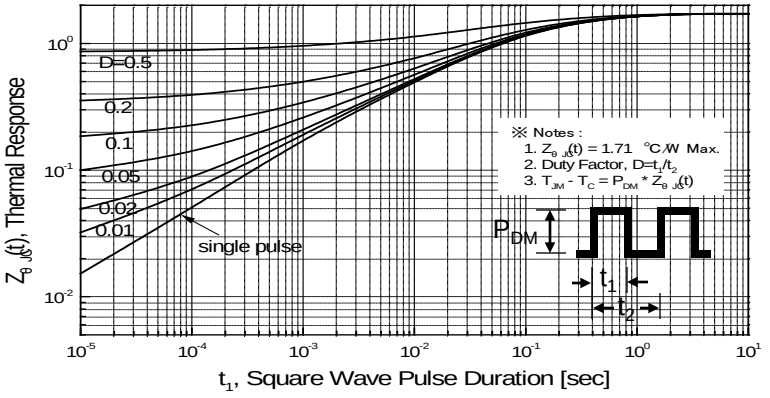

Figure 11. Transient Thermal Response Curve

© SEMIHOW REV.A0,June 2005

Fig 12. Gate Charge Test Circuit & Waveform

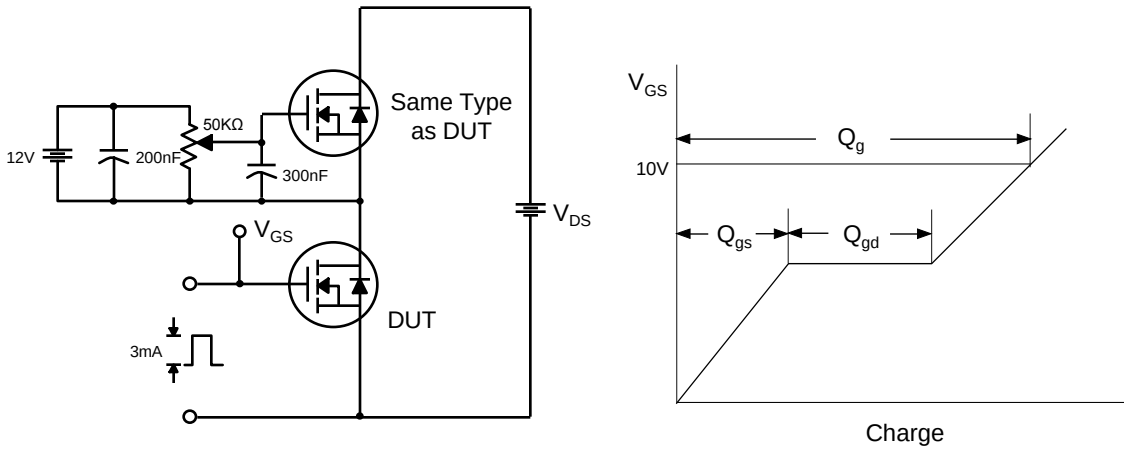

Fig 13. Resistive Switching Test Circuit & Waveforms

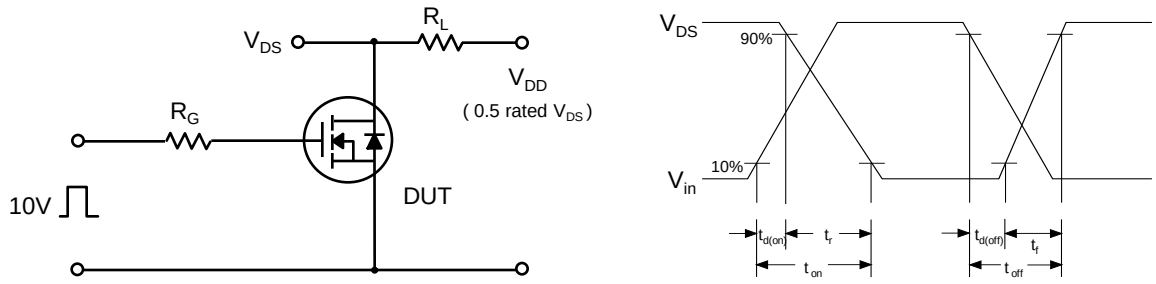

Fig 14. Unclamped Inductive Switching Test Circuit & Waveforms

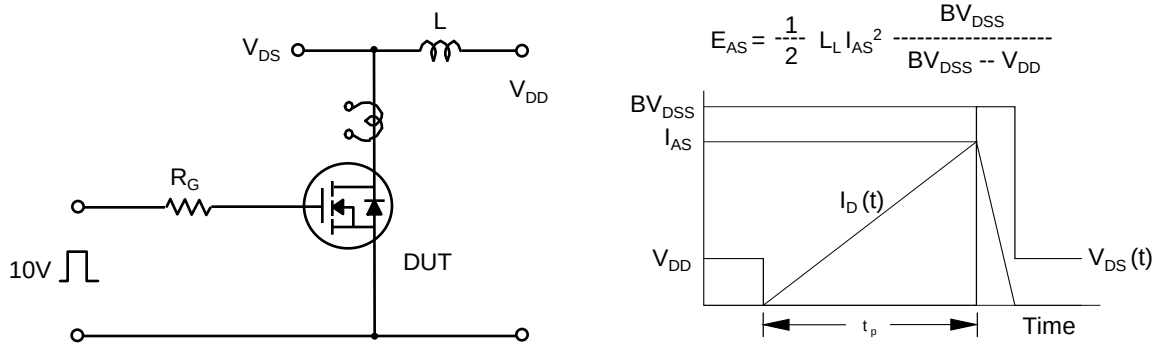

© SEMIHOW REV.A0,June 2005

Fig 15. Peak Diode Recovery dv/dt Test Circuit & Waveforms

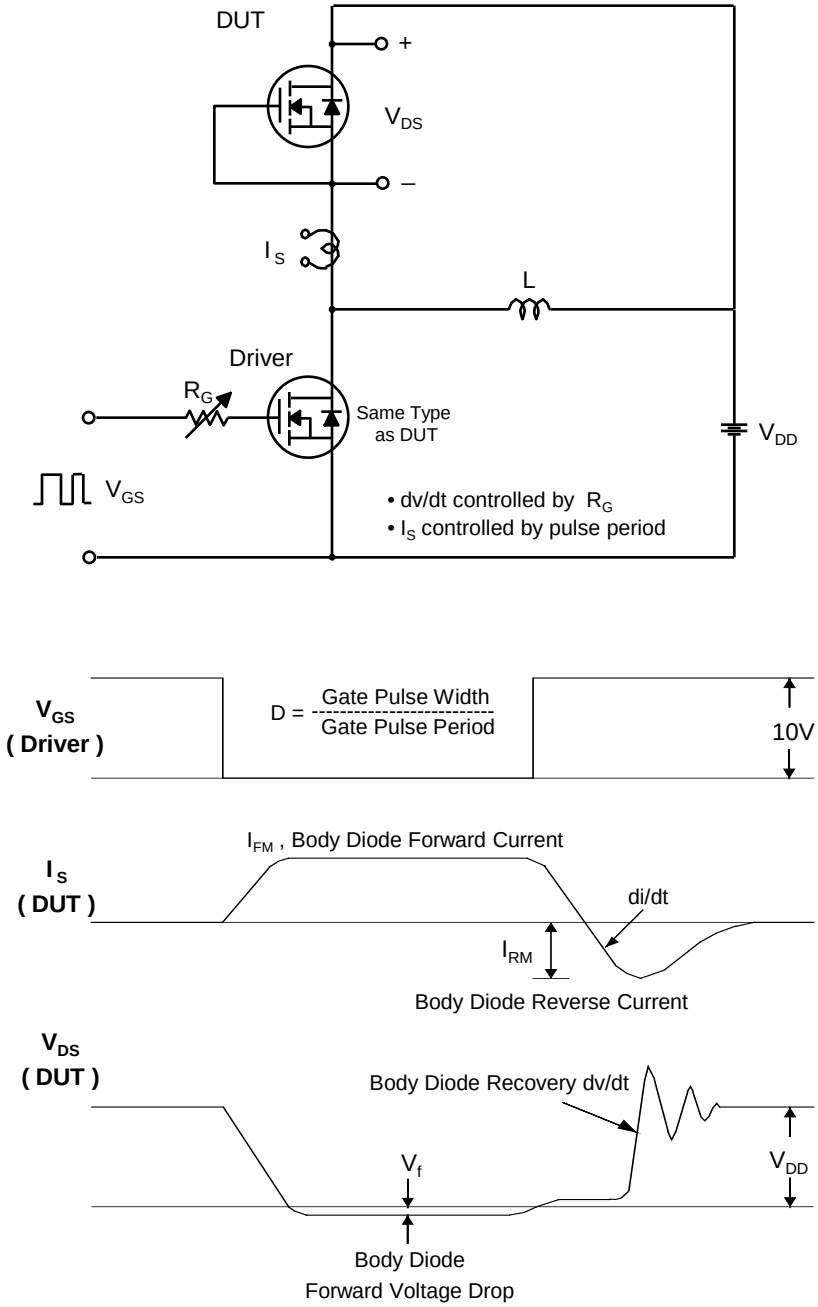

© SEMIHOW REV.A0,June 2005

Package Dimension

TO-220 (A)

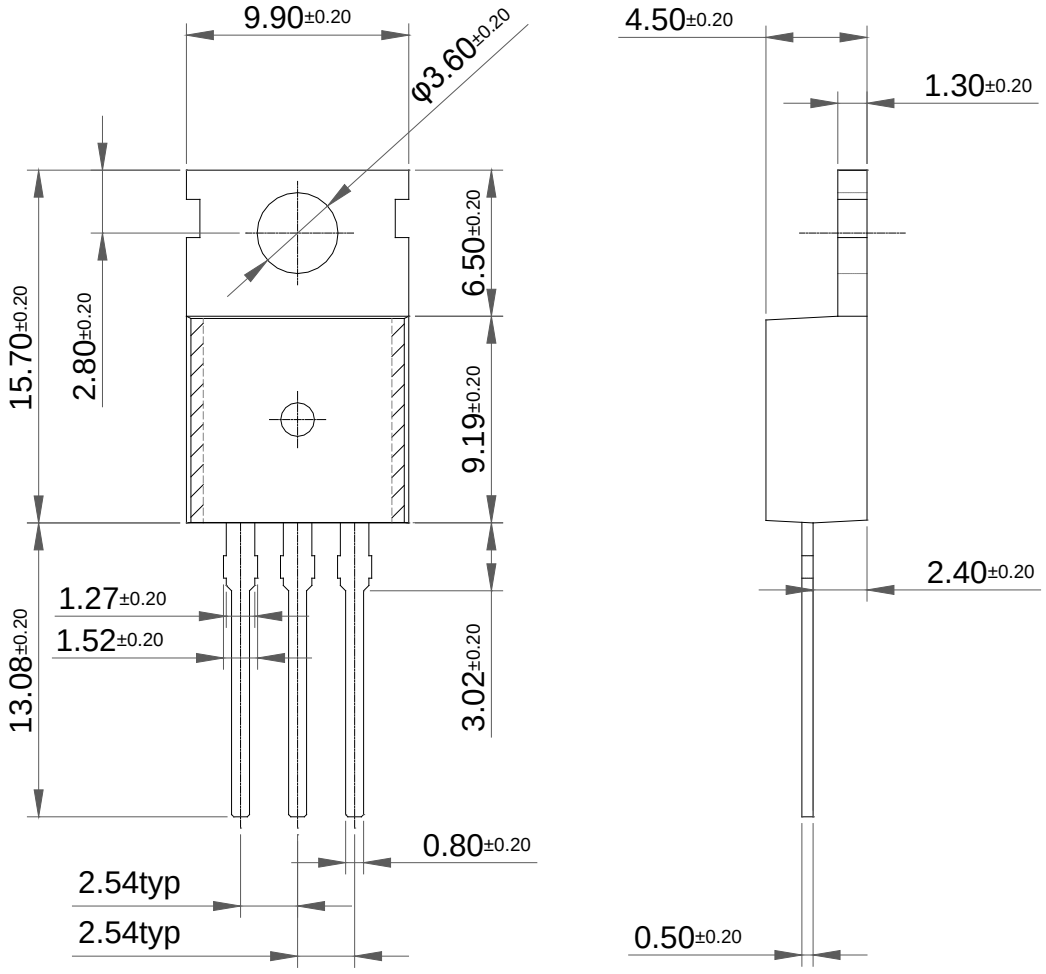

© SEMIHOW REV.A0,June 2005

TO-220 (B)

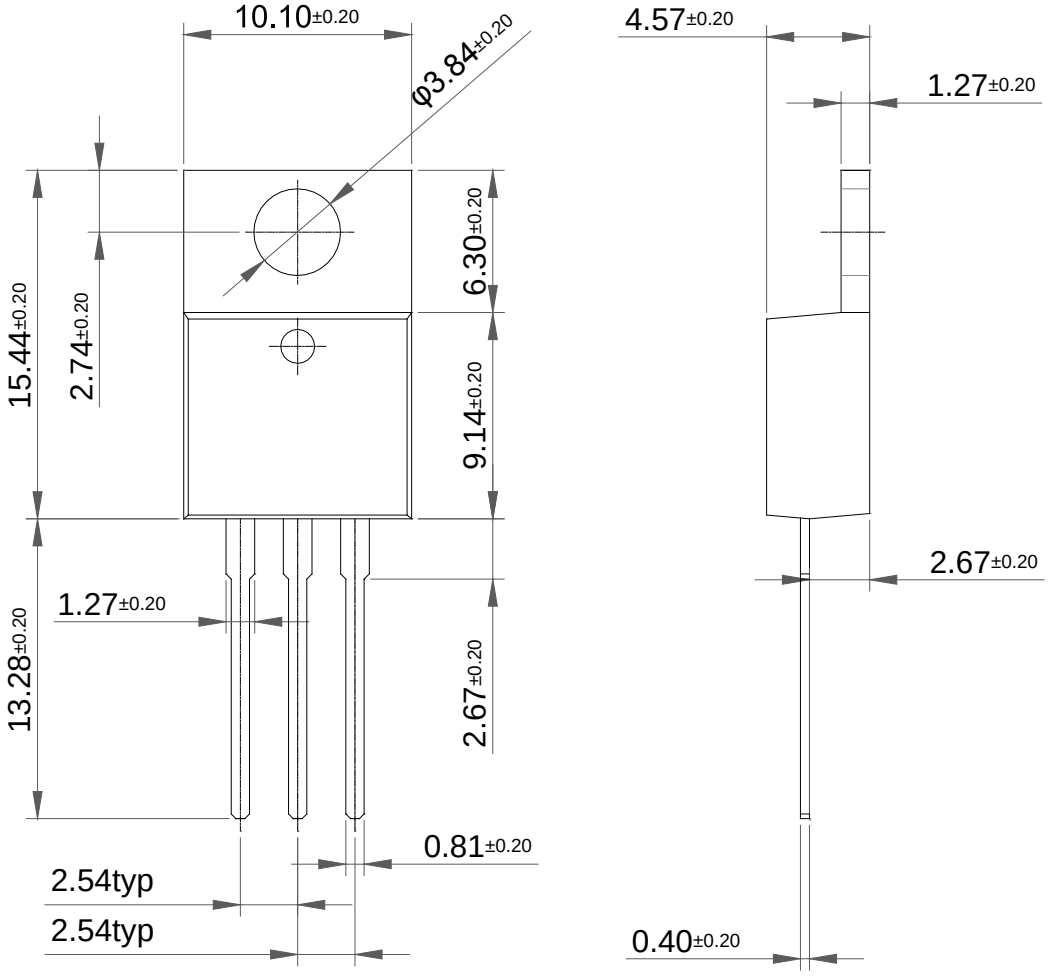

© SEMIHOW REV.A0,June 2005